THE INFORMATION CONTAINED IN THIS DRAWING IS THE SOLE PROPERTY OF VTE INCORPORATED. ANY REPRODUCTION IN PART OR WHOLE WITHOUT THE WRITTEN PERMISSION OF VTE INCORPORATED IS PROHIBITED.

LTR.	REVISIONS	DATE
><	**********	00-000-00

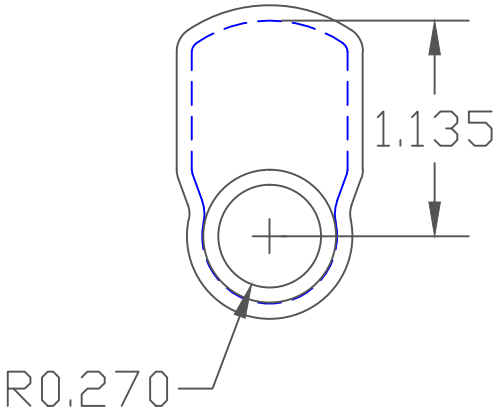

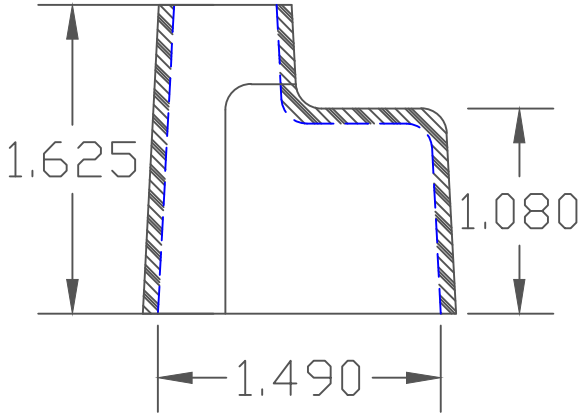

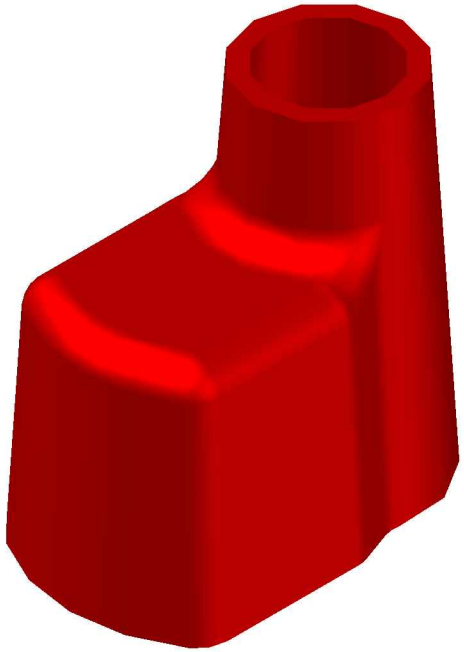

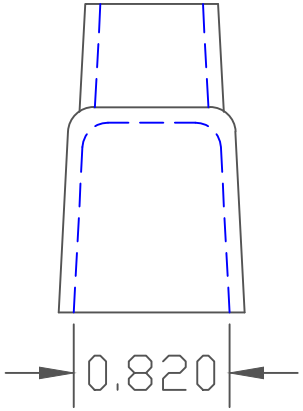

TOLERANCE UNLESS OTHERWISE SPECIFIED:
MOLDED PRODUCTS ONLY: ±.030"/±0.8mm
HARDWARE ITEMS: ±0.010"/±0.25mm
RADIAL DIAMETERS TO BE MEASURED OVER MANDRELS,
RING GAGES OR PIN GAGES OF SUITABLE SIZE

VTE Material Part No:	1101650102
Material:	RED PVC
Material Part No	9812-65-RED683
Max. Opertating Temp:	105 C
Shore Durometer	"A" 10 SEC. 67/62
Specific Gravity:	1.34
Ult. Elongation %:	475
Brittle Temp:	-44 C
Tensile Strength PSI:	1547 PSI
U.L. Rating:	94 V2
MEETS:	FMVSS.302

VTE Incorporated
5437 Robinson Road, P.O. Box 790
Pellston, Michigan 49769
Telephone: 1-800-527-9256, 231-539-8000
FAX: 231-539-0914

REF: ****	DATE: 1-7-14	DRN BY: TJH / CHK'D BY: BRH	WEIGHT: ****
TITLE: BATTERY TERMINAL INSULATOR			SCALE:
MATERIAL:		PART NO. 693N9V02	
COLOR: *****	DRG CLASS *****		